PARTS LIST

PART CODE	MATERIAL	COMPONENT	GROUP	DESCRIPTION	PART NUMBER	BOM	G1	G2	G3	G4	G5	G6	G7	G8	G9	G10	G11	G12	G13	G14	G15
PP-150	CS	N/A	N/A	FLANGE, 3/4 in, CS, HGALV	W-231N-AC-3075NN-84453-BA-1	1	4	4	4	4	4	4	4	4	4	4	4	8	8	8	4
PP-150	CS	N/A	N/A	FLANGE, 1/2 in, N, CS, HGALV	W-231N-AC-3050NN-84453-BA-1	2	16	16	16	16	16	16	16	16	16	16	16	16	16	16	16
PP-150	CS	N/A	N/A	FLANGE, 3/4 in, N, CS, HGALV	W-231N-AC-3075NN-84453-BA-1	3	8	8	8	8	8	8	8	8	8	8	8	16	16	16	8
PP-150	CS GRDH	N/A	N/A	H NUT, 1/2 - 13, CS, GRDH, HGALV	N-220N-03-C-AANN-56306B-BA-1	4	8	8	8	8	8	8	8	6	6	8	8	8	8	8	8
PP-150	CS GRDH	N/A	N/A	H NUT, 3/4 - 10, CS, GRDH, HGALV	N-220N-03-C-AANN-56306B-BA-1	5	4	4	4	4	4	4	4	4	4	4	4	8	8	8	4
PP-150	CS120	N/A	N/A	HCS, 1/2-13 X 1 1/2 in, CS120, HGALV	S-210N-A36-C-AR-27-325AN-BA-1	6	8	8	8	8	8	8	8	8	8	8	8	8	8	8	8
PP-150	CS120	N/A	N/A	HCS, 3/4-10 X 2 1/2 in, CS120, HGALV	S-210N-A36-C-AR-27-325AN-BA-1	7	4	4	4	4	4	4	4	4	4	4	4	8	8	8	4
PP-300	N/A	STR	SPT	VERT SPT STD NEMA 2 THRU HGALV	1_418_954_P1	8	2	-	-	-	-	-	-	-	-	-	-	-	-	-	-
PP-300	N/A	STR	SPT	VERT SPT STD HGALV	1_418_954_P2	9	2	2	-	-	-	-	-	-	-	-	-	-	-	-	-
PP-300	N/A	STR	SPT	VERT SPT STD NEMA 2 TAP HGALV	1_418_954_P3	10	-	2	-	-	-	-	-	-	-	-	-	-	-	-	-
PP-300	N/A	STR	SPT	VERT SPT EXTN HT 8" NEMA 2 THRU HGALV	1_418_954_P4	11	-	-	2	-	-	-	-	-	-	-	-	-	-	-	-
PP-300	N/A	STR	SPT	VERT SPT EXTN HT 8" HGALV	1_418_954_P5	12	-	-	2	-	-	-	-	-	-	-	-	-	-	-	-
PP-300	N/A	STR	SPT	VERT SPT EXTN HT 3.4" NEMA 2 THRU HGALV	1_418_954_P6	13	-	-	-	2	-	-	-	-	-	-	-	-	-	-	-
PP-300	N/A	STR	SPT	VERT SPT EXTN HT 3.4" HGALV	1_418_954_P7	14	-	-	-	2	-	-	-	-	-	-	-	-	-	-	-
PP-300	N/A	STR	SPT	VERT SPT EXTN HT 2.1" NEMA 4 THRU HGALV	1_418_954_P8	15	-	-	-	-	2	-	-	-	-	-	-	-	-	-	-
PP-300	N/A	STR	SPT	VERT SPT EXTN HT 2.1" HGALV	1_418_954_P9	16	-	-	-	-	2	-	-	-	-	-	-	-	-	-	-
PP-300	N/A	STR	SPT	VERT SPT EXTN HT 2.1" 2 HOLE THRU HGALV	1_418_954_P10	17	-	-	-	-	-	2	-	-	-	-	-	-	-	-	-
PP-300	N/A	STR	SPT	VERT SPT EXTN HT 2.1" HGALV	1_418_954_P11	18	-	-	-	-	-	2	-	-	-	-	-	-	-	-	-
PP-300	N/A	STR	SPT	VERT SPT EXTN HT 14.3" 2 HOLE THRU HGALV	1_418_954_P12	19	-	-	-	-	-	-	2	-	-	2	-	-	-	-	-
PP-300	N/A	STR	SPT	VERT SPT EXTN HT 14.3" HGALV	1_418_954_P13	20	-	-	-	-	-	-	2	-	-	-	-	-	-	-	-
PP-300	N/A	STR	SPT	VERT SPT EXTN HT 12.4" NEMA 2 THRU HGALV	1_418_954_P14	21	-	-	-	-	-	-	-	2	-	-	-	-	-	-	-
PP-300	N/A	STR	SPT	VERT SPT EXTN HT 12.4" HGALV	1_418_954_P15	22	-	-	-	-	-	-	-	2	-	-	-	-	-	-	-
PP-300	N/A	STR	SPT	VERT SPT EXTN HT 14.3" NEMA 2 THRU HGALV	1_418_954_P16	23	-	-	-	-	-	-	-	-	2	-	-	-	-	-	-
PP-300	N/A	STR	SPT	VERT SPT EXTN HT 14.3" HGALV	1_418_954_P17	24	-	-	-	-	-	-	-	-	2	-	-	-	-	-	-
PP-300	N/A	STR	SPT	VERT SPT STD 1-1/4" AHR NEMA 2 THRU HGALV	1_418_954_P18	25	-	-	-	-	-	-	-	-	-	2	-	-	-	-	-
PP-300	N/A	STR	SPT	VERT SPT STD 1 1/4" AHR HGALV	1_418_954_P19	26	-	-	-	-	-	-	-	-	-	2	-	-	-	-	-
PP-300	N/A	STR	SPT	VERT SPT STD SEIS NEMA 2 THRU HGALV	1_418_954_P20	27	-	-	-	-	-	-	-	-	-	-	-	-	2	-	-
PP-300	N/A	STR	SPT	VERT SPT STD SEIS HGALV	1_418_954_P21	28	-	-	-	-	-	-	-	-	-	-	-	2	-	-	-
PP-300	N/A	STR	SPT	VERT SPT EXTN HT 8" SEIS NEMA 2 THRU HGALV	1_418_954_P22	29	-	-	-	-	-	-	-	-	-	-	-	-	2	-	-
PP-300	N/A	STR	SPT	VERT SPT EXTN HT 8" SEIS HGALV	1_418_954_P23	30	-	-	-	-	-	-	-	-	-	-	-	-	2	-	-
PP-300	N/A	STR	SPT	VERT SPT EXTN HT 31.9" NEMA 2 THRU HGALV	1_418_954_P24	31	-	-	-	-	-	-	-	-	-	-	2	-	-	-	-
PP-300	N/A	STR	SPT	VERT SPT EXTN HT 31.9" HGALV	1_418_954_P25	32	-	-	-	-	-	-	-	-	-	-	2	-	-	-	-
PP-300	N/A	STR	SPT	VERTDIAG BRC HGP L = 73.5" HGALV	1_417_036_P5	33	4	4	4	4	4	4	4	4	4	4	-	-	-	4	-
PP-300	N/A	STR	SPT	VERTDIAG BRC HGP L = 79" HGALV	1_417_036_P6	34	-	-	-	-	-	-	-	-	-	-	4	-	-	-	-
PP-300	N/A	STR	SPT	VERTDIAG BRC HGP L = 85.3" HGALV	1_417_036_P7	35	-	-	-	-	-	-	-	-	-	-	-	4	-	-	-
PP-300	N/A	STR	SPT	VERT SPT EXTN HT 8" SEIS NEMA 2 THRU HGALV CWT	1_417_027_P1	36	-	-	-	-	-	-	-	-	-	-	-	-	-	2	-
PP-300	N/A	STR	SPT	VERT SPT EXTN HT 8" SEIS HGALV CWT	1_417_027_P2	37	-	-	-	-	-	-	-	-	-	-	-	-	2	-	-
PP-300	N/A	STR	SPT	VERT SPT EXTN HT 12.4" NEMA 2 TAP HGALV	1_418_954_P26	38	-	-	-	-	-	-	-	-	-	-	-	-	-	-	2
PP-300	N/A	STR	SPT	VERT SPT EXTN HT 12.4" HGALV	1_418_954_P27	39	-	-	-	-	-	-	-	-	-	-	-	-	-	-	2
PP-300	N/A	STR	SPT	VERTDIAG BRC HGP L = 76.4" HGALV	1_417_036_P8	40	-	-	-	-	-	-	-	-	-	-	-	-	-	-	4
PP-300	N/A	STR	SPT	VERTDIAG BRC HGP L = 77.8" HGALV	1_417_036_P9	41	-	-	-	-	-	-	-	-	-	-	-	-	-	-	4
PP-300	CU	ACC	HVT	GND FAB CU NEMA2	1_417_552_P1	42	-	-	-	-	-	-	-	-	-	-	-	-	-	-	2

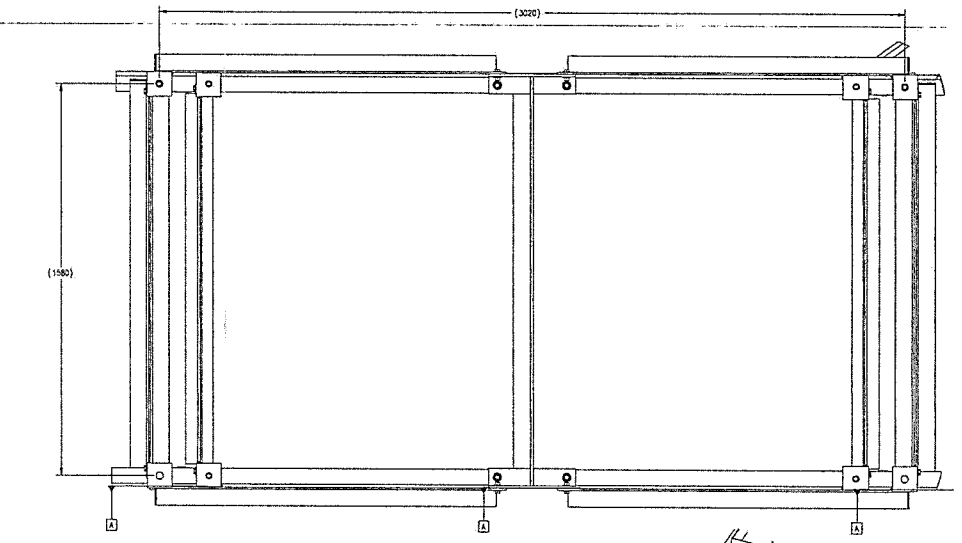

FOUNDATION FOOTPRINT (G1-G16)

PART/GROUP VARIATIONS

VARIATION	DESCRIPTION
G1	STD NEMA 2 THRU HGALV
G2	STD NEMA 2 TAP HGALV
G3	EXTN HT 8" NEMA 2 THRU HGALV
G4	EXTN HT 3.4" NEMA 2 THRU HGALV
G5	EXTN HT 2.1" NEMA 4 THRU HGALV
G6	EXTN HT 2.1" 2 HOLE THRU HGALV
G7	EXTN HT 14.3" 2 HOLE THRU HGALV
G8	EXTN HT 12.4" NEMA 2 THRU HGALV
G9	EXTN HT 14.3" NEMA 2 THRU HGALV
G10	1-1/4" NEMA 2 THRU HGALV
G11	EXTN HT 31.9" NEMA 2 THRU HGALV
G12	STD SEIS NEMA 2 THRU HGALV
G13	EXTN HT 8" SEIS NEMA 2 THRU HGALV
G14	EXTN HT 8" SEIS NEMA 2 THRU HGALV CWT
G15	EXTN HT 8" NEMA 2 TAP HGALV
A G16	EXTN HT 56" NEMA 2 THRU HGALV

NOTES:

1) BOM AND BALLOONS ARE NOT PARAMETRIC USE CAUTION UPON REVISING.

2) HARDWARE FROM TRANSPORT BRACING SHALL BE USED TO FASTEN LOWER CROSS-MEMBERS.

ASSEMBLY INSTRUCTIONS:

1) ASSEMBLE VERTICAL SUPPORTS AT DEPICTED LOCATIONS.

2) APPLY LOCTITE 262 TO ALL THREADED FASTENERS PRIOR TO INSTALLATION.

3) INSTALL APPROPRIATE FASTENERS AS DEPICTED ON DRAWING.

4) AFTER ACHIEVING PROPER ALIGNMENT, TORQUE FASTENERS ACCORDING TO AREVA SPECIFICATION TS-00007.

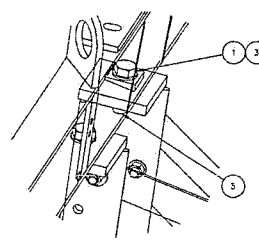

DETAIL A

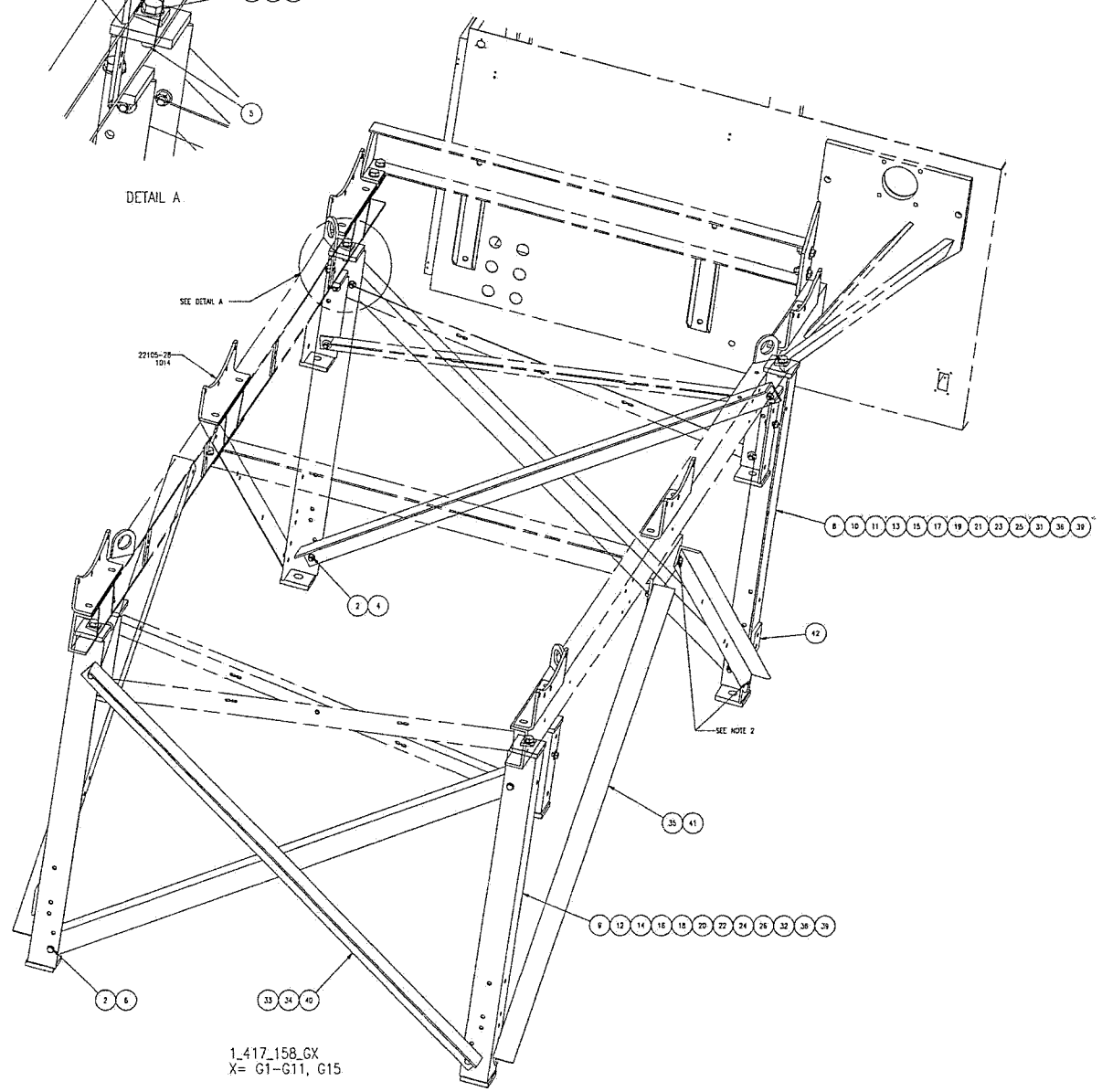

1_417_158_GX
X= G1-G11, G15

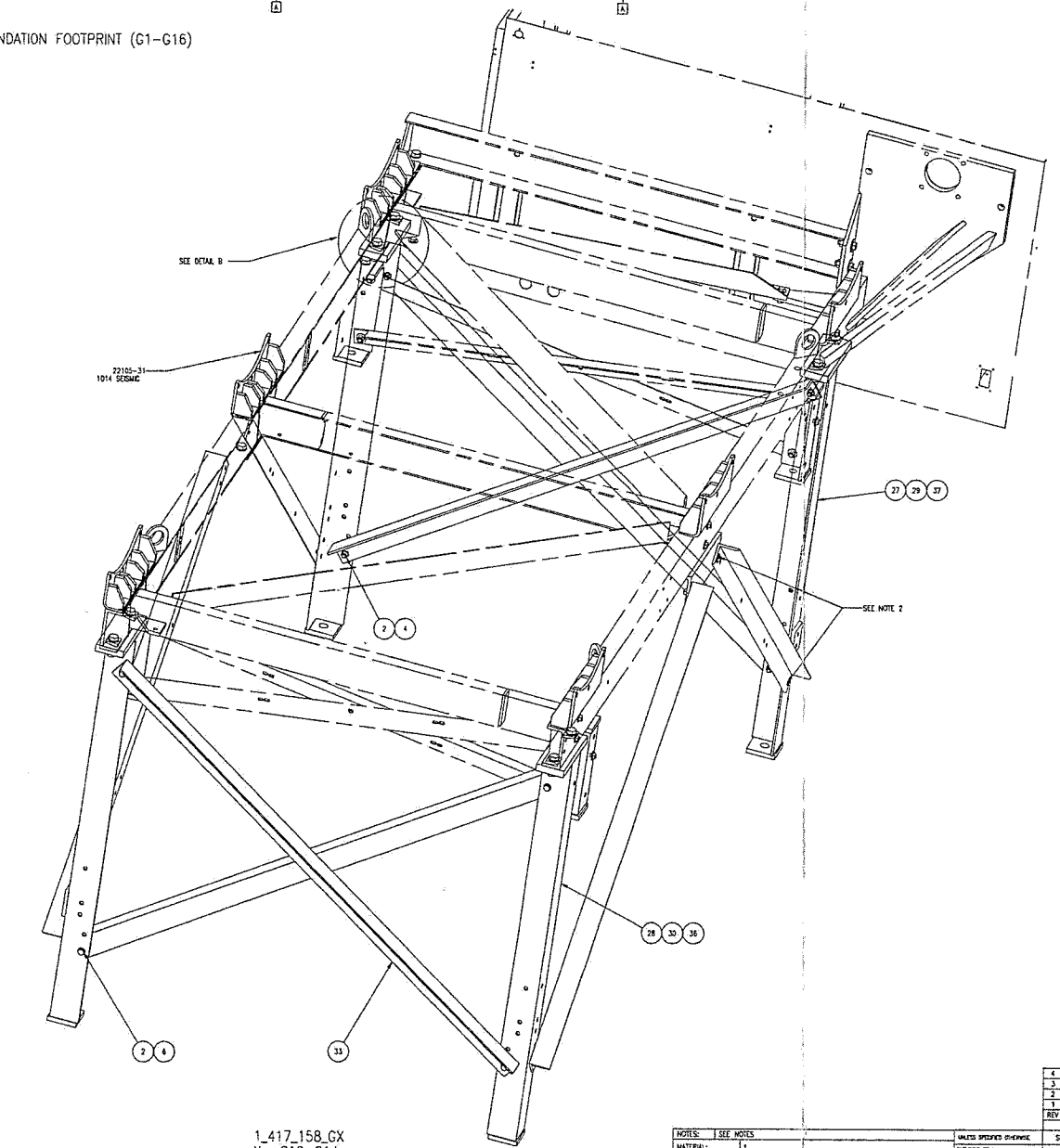

1_417_158_GX
X= G12-G14

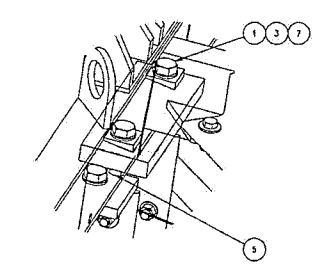

DETAIL B

REV (ECN NO)	DESCRIPTION	DATE	REVISED BY
4	8091 MODIFIED LENGTH ITEMS 108 AND 109 ON SHEET 2	03-01-2006	S. Mike
3	-- ADDED G15 ON SHEET 2 AND ITEMS 106, 109, 110	01-20-2006	S. Mike
2	-- ADDED G13 AND ITEMS 36, 39, 40 AND 41	07-21-2005	C. Greenan
1	-- ADDED G14 AND ITEMS 38 AND 37.	12-16-2004	J. Sasak

REVISIONS

NOTES:	SEE NOTES	UNLESS SPECIFIED OTHERWISE DIMENSIONS ARE IN mm.	
MATERIAL:	*		
COATING:	*		
TEST:	*		
ASSEMBLY INSTRUCTIONS:	SEE ASSEMBLY INSTRUCTIONS		
RUBBER STAMP OR TAG PART WITH PART NUMBER AND REVISION LEVEL		ACC	
ALL DIMENSIONS SHOWN ARE FINISHED SIZES AFTER COATING. EQUIVALENT MATERIAL SHAPE MAY BE SUBSTITUTE BY AREVA ENGINEERING DEPARTMENT.		RECYCLED MATERIAL RECOMMENDED OR SPECIFIED UPON CONFIRMATION	

THIRD ANGLE PROJECTION

SIGNATURES	DATE
DRAWN BY L. Greenan	10-29-2004
ENGINEERING BY L. Greenan	10-29-2004
DRAFTING APPROVAL L. Greenan	10-29-2004
ENGINEERING APPROVAL M. Gardner	10-29-2004

THIS DRAWING MAY BE USED IN WHOLE OR IN PART ONLY WITH THE WRITTEN CONSENT OF AREVA NUCLEAR INC. REPRODUCTION

AREVA

AREVA T &D Inc.
One Power Lane
Charleroi, PA 15022

TITLE: HGF 1014 F1 STR SPT ASSY

SIZE: D | DWG NUMBER: HG14D 1_417_158 | REV: 4

SCALE: NTS | SHEET 1 OF 2